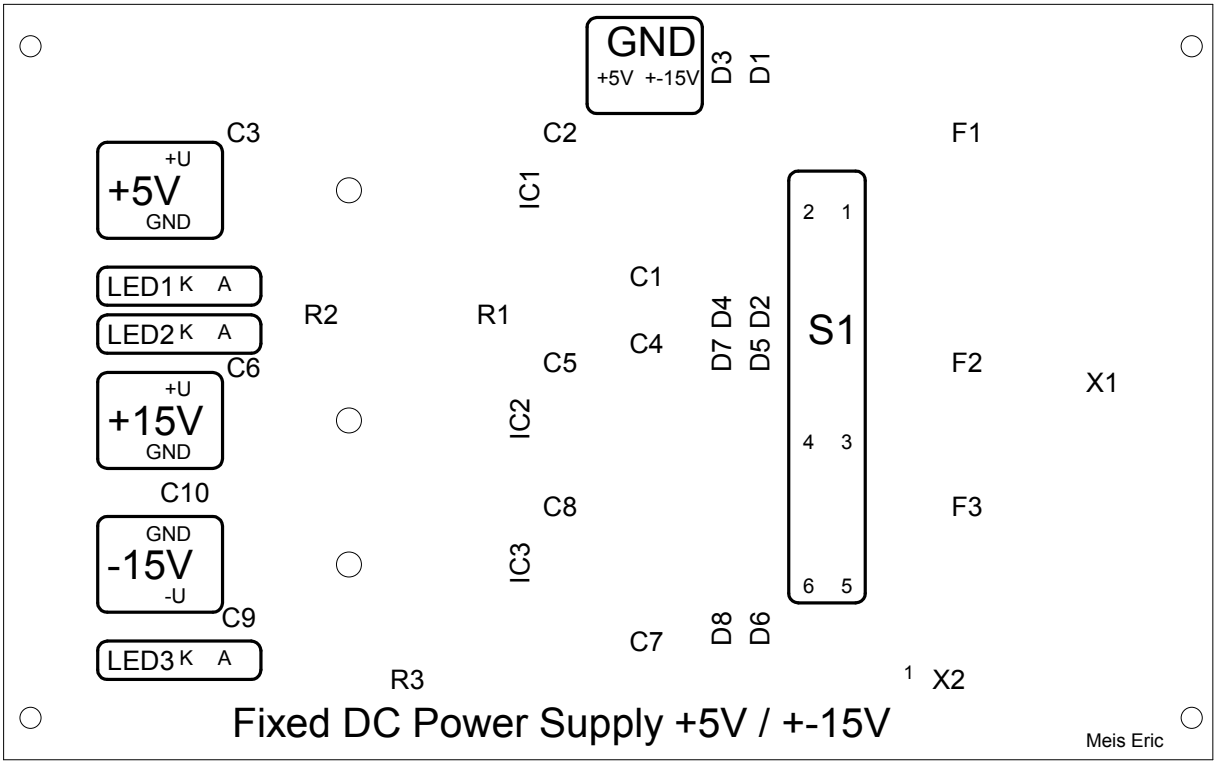
GND
+5V +-15V
D3
D1
C3
C2
F1
+U
+5V
GND
IC1
2 1
LED1 K A
C1
LED2 K A
R2
R1
D7 D4
D5 D2
S1
C4
C5
F2
X1
C6
+U
+15V
GND
IC2
4 3
C10
C8
F3
GND
-15V
-U
IC3
6 5
C9
D8
D6
LED3 K A
C7
R3
1 X2
Fixed DC Power Supply +5V / +-15V
Meis Eric

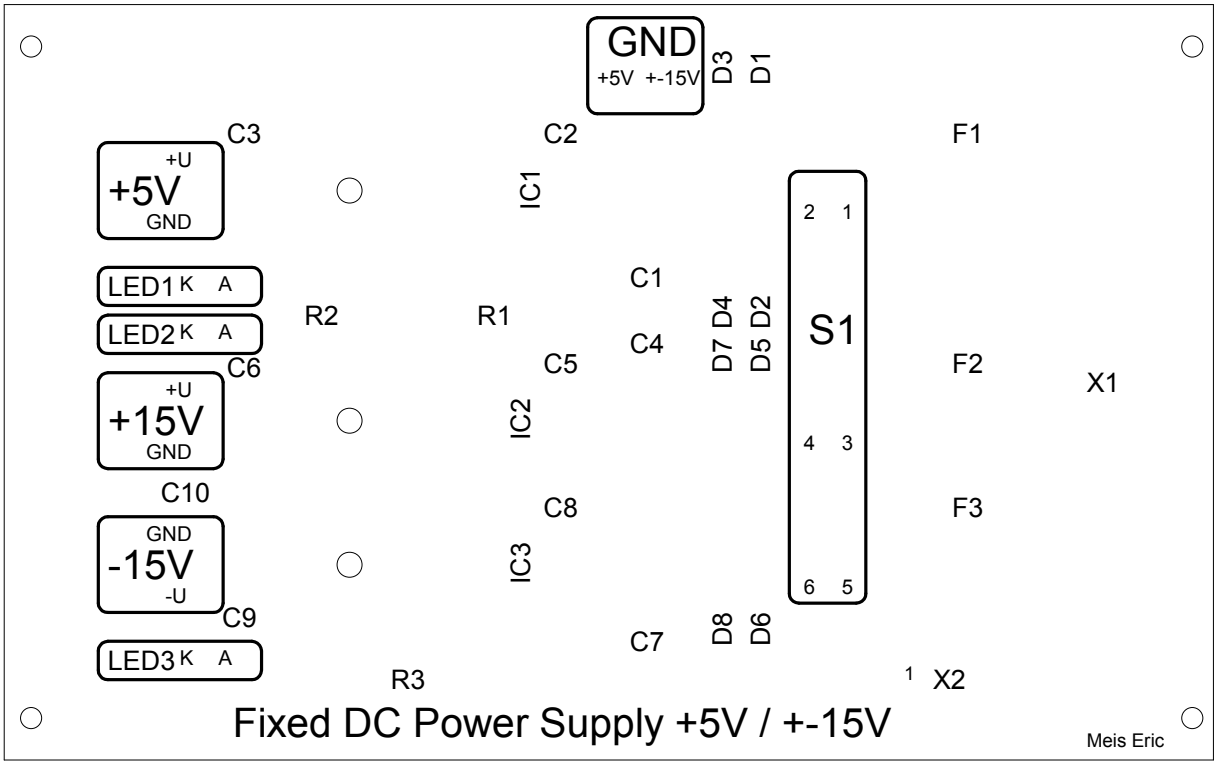
GND
+5V +-15V
D3
D1
C3
C2
F1
+U
+5V
GND
IC1
2 1
LED1 K A
C1
LED2 K A
R2
R1
D7 D4
D5 D2
S1
C4
C5
F2
X1
C6
+U
+15V
GND
IC2
4 3
C10
C8
F3
GND
-15V
-U
IC3
6 5
C9
D8
D6
LED3 K A
C7
R3
1 X2
Fixed DC Power Supply +5V / +-15V
Meis Eric